United States Patent [19]

Sperry

[11] Patent Number: 4,852,561

[45] Date of Patent: Aug. 1, 1989

[54] INHALATION DEVICE

[76] Inventor: Charles R. Sperry, 113 Clinton St., Springfield, Vt. 05156

[21] Appl. No.: 224,883

[22] Filed: Jul. 27, 1988

[51] Int. Cl.[4] A61M 15/00

[52] U.S. Cl. 128/200.23; 128/203.15; 128/200.18

[58] Field of Search 128/200.23, 200.18, 128/203.15, 203.23, 203.13, 203.12

[56] References Cited

U.S. PATENT DOCUMENTS

3,560,070	2/1971	Hanson et al.	128/173
3,732,864	5/1973	Thompson et al.	128/173 R
3,814,297	6/1974	Warren	222/402.13
3,826,413	7/1974	Warren	222/402.13
4,414,972	11/1983	Young et al.	128/200.23
4,470,412	9/1984	Nowacki et al.	128/200.18
4,484,577	11/1984	Sackner et al.	128/203.28
4,534,343	8/1985	Nowacki et al.	128/200.23
4,570,630	2/1986	Elliott et al.	128/203.15
4,952,348	6/1986	Waters, IV et al.	128/200.23

FOREIGN PATENT DOCUMENTS

699313	12/1964	Canada	128/200.18
8502778	7/1985	World Int. Prop. O.	128/203.15

Primary Examiner—Edgar S. Burr
Assistant Examiner—Kimberly L. Asher
Attorney, Agent, or Firm—Lerner, David, Littenberg, Krumholz & Mentlik

[57] ABSTRACT

An inhalation device in the nature of a metered dose inhaler is designed specifically for existing respiratory drugs to be employed in hospitals and/or by patients at home. The device is constructed of a housing which defines an aerosol chamber for a metered dose of a medicant containing aerosol from a cartridge. The cartridge is supported wholly within the aerosol chamber. An actuating valve mechanism is slidingly receiving within an open end of the housing and includes a projecting portion to which a compressive force may be applied. Upon application of the compressive force, for example, by forcing the open end of the housing against a supporting surface, the outlet valve mechanism of the cartridge is activated to dispense a metered dose of medicant into the aerosol chamber in the form of an aerosol.

26 Claims, 3 Drawing Sheets

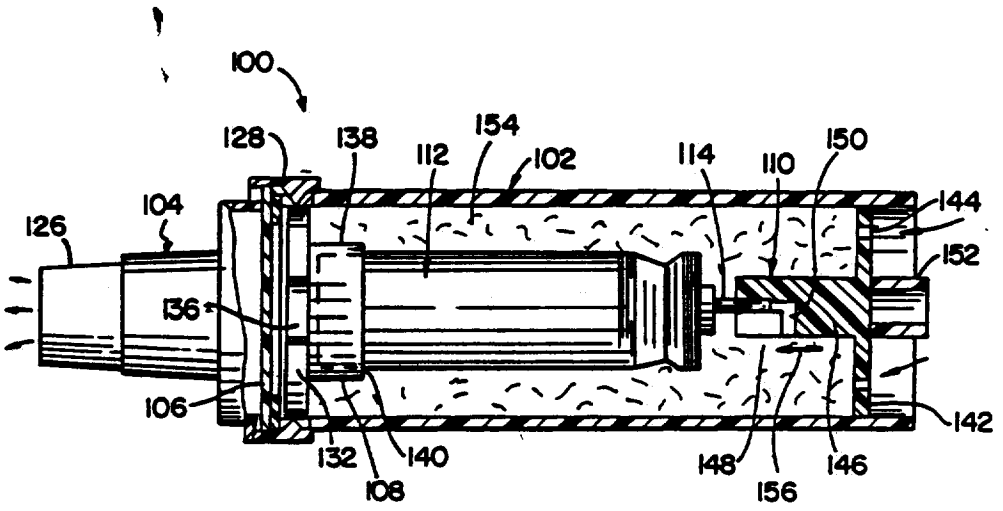

RECEIVED
PHILIP MORRIS MANAGEMENT CORP.
LAW DEPT.-PATENT SECTION

NOV - 8 1989

2 NOTED

Source: https://www.industrydocuments.ucsf.edu/docs/rlkl0000

2021391951